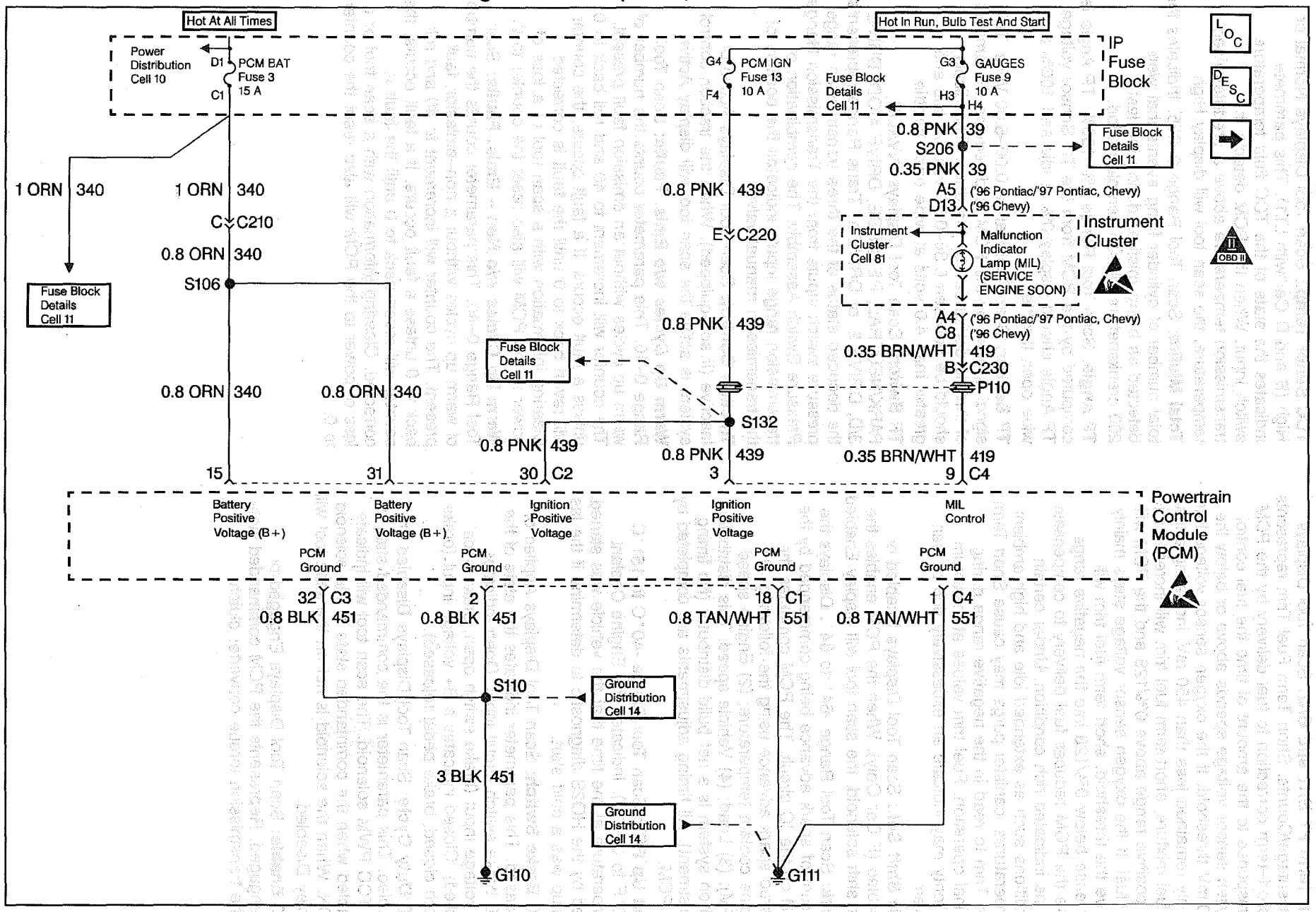## Engine Controls (Power, Ground and MIL)