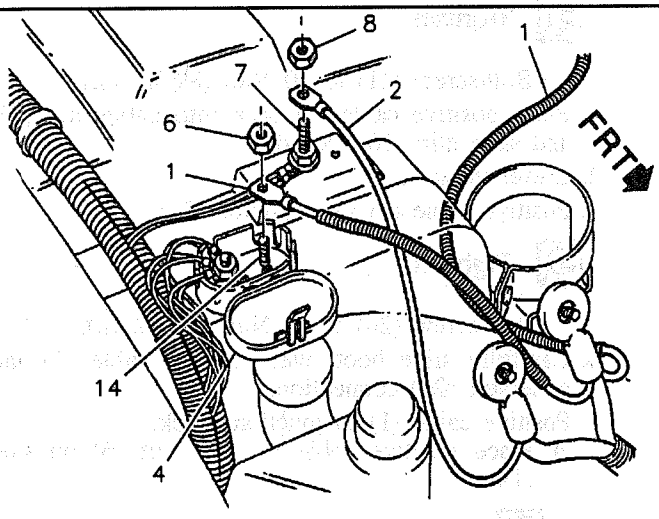

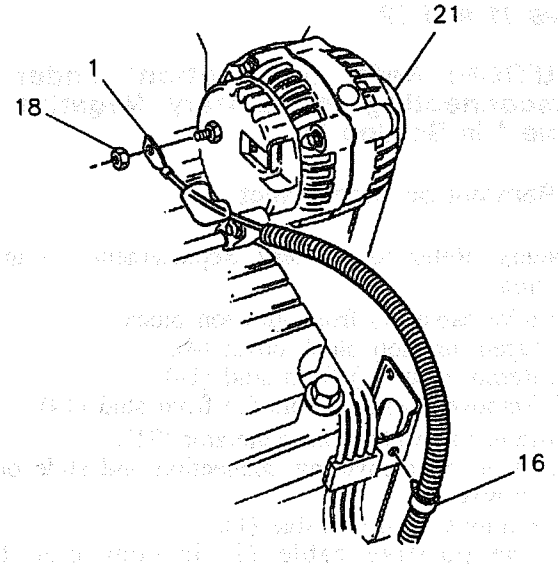

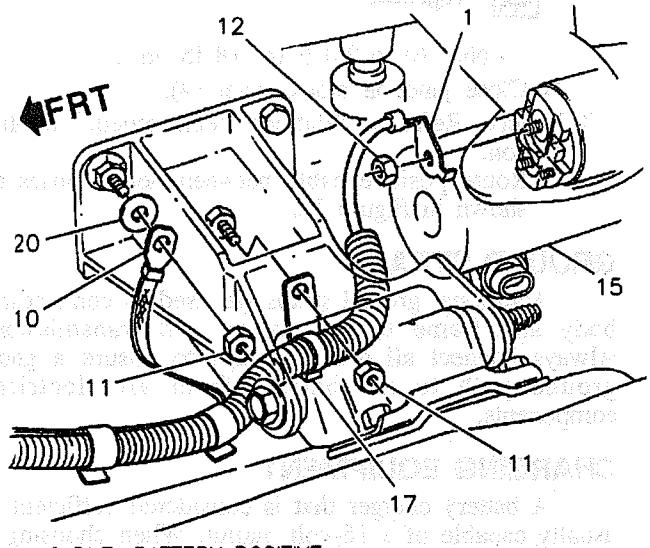

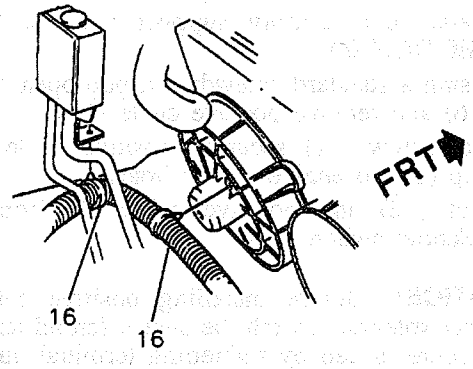

1 CABLE, BATTERY POSITIVE
2 CABLE, BATTERY NEGATIVE
4 COVER, JUNCTION BLOCK
6 NUT, BATTERY POSITIVE CABLE-TO-JUNCTION BLOCK
7 STUD, GROUND
8 NUT, BATTERY NEGATIVE-TO-GROUND
10 RF GROUND, BATTERY POSITIVE CABLE
11 NUT, BATTERY-POSITIVE AND NEGATIVE CABLE CLIP
12 NUT, BATTERY POSITIVE CABLE
13 NUT, BATTERY NEGATIVE CABLE-TO-ENGINE BLOCK GROUND
14 STUD, JUNCTION BLOCK POSITIVE TERMINAL
15 MOTOR, STARTER
16 CLIP, CABLE
17 CLIP, CABLE
18 NUT, BATTERY POSITIVE CABLE-TO-GENERATOR STUD
20 WASHER, BATTERY POSITIVE RF GROUND
21 GENERATOR

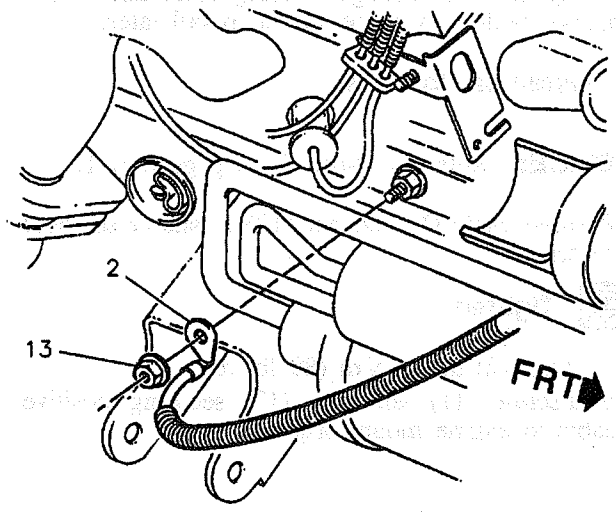

11-17-94
FS0146D1

Figure 10 - Battery Cable Routing (3800 VIN K)